APT MANUFACTURINGsolutions

PALLETIZING SOLUTIONS

APT IS...

MANUFACTURING SOLUTIONS

We've been solving manufacturing challenges since 1996. We believe that our hard-working culture and "whatever it takes" attitude becomes a competitive advantage for our customers and partners.

The APT Vision is to become a strategic partner for our customers that will develop outside-the-box solutions to their manufacturing challenges.

Our 70,000 square foot building sits on a fifteen-acre campus only minutes from Fort Wayne, Indiana. We are centrally located between Chicago, Detroit, Cleveland, Columbus, Cincinnati, and Indianapolis. You will find our machines and machined parts throughout the United States and the World.

We strongly believe that a competitive advantage of ours is the community in which we live and work. Our "farm roots" community has taught us many of the values we hold today, including hard work and integrity. We've been recognized by many of the largest manufacturers in the world as a company that refuses to fail and will succeed at all costs. We believe this is a direct result of the strong environment around us.

It's imperative that we continue to give back to that same community and help it flourish. We are heavily involved in the community around us through various programs. The largest is the APT Training Center. A place where high school students spend a year at APT in the afternoons learning manufacturing. We teach engineering, machining, robotics, safety, and more. Those students qualify for college credit during the year and end up with a fantastic robot project to be proud of.

Our mission at APT is to develop solutions for manufacturers, conduct business in an honest way, produce a product that we can be proud of, educate and train people, and provide for our families.
Whatever you do, work at it wholeheartedly as though you were doing it for the Lord and not merely for people. Colossians 3:23.

TABLE OF CONTENTS

PAIL PALLETIZER 3

OVER UNDER PALLETIZER 7

UNIT LOAD FORMER SYSTEM 9

PALLETIZER CELL 11

1 IN 1 OUT PALLETIZER 13

1 IN 2 OUT PALLETIZER 15

2 IN 2 OUT PALLETIZER 19

PALLETIZER/STRETCH WRAP COMBO 29

BAG PALLETIZER 31

ADVANCED PALLETIZING TECHNOLOGY 33

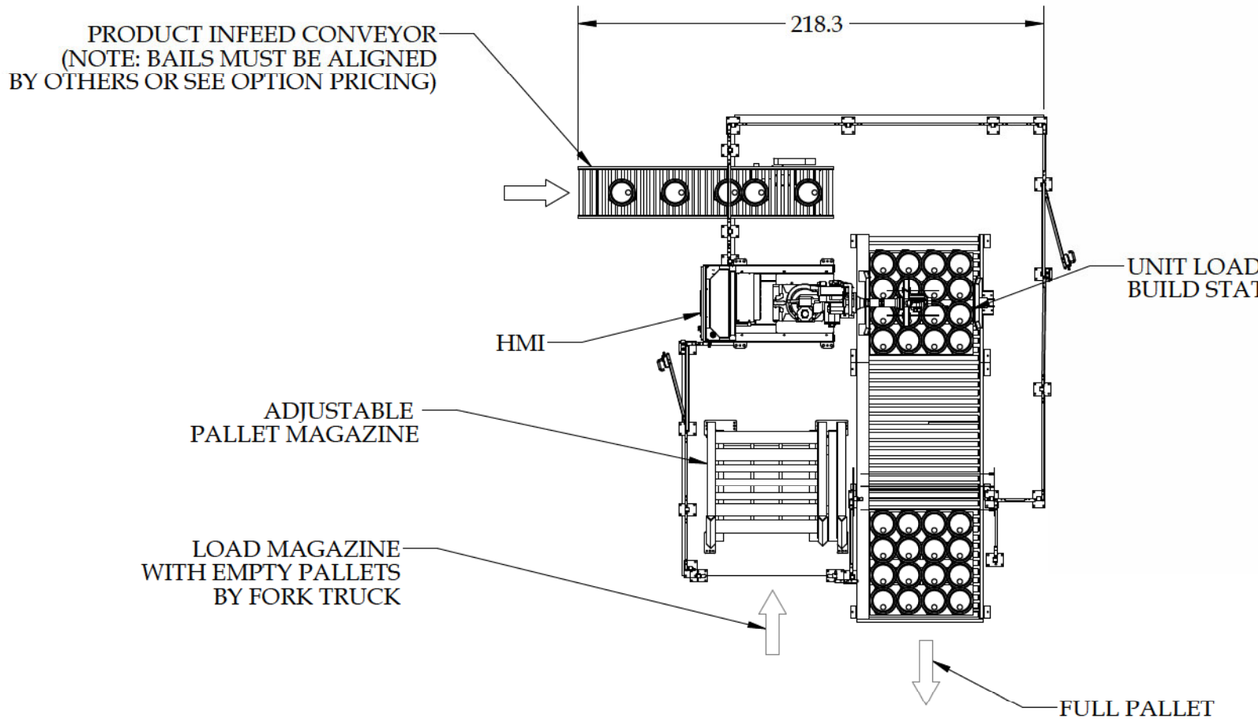

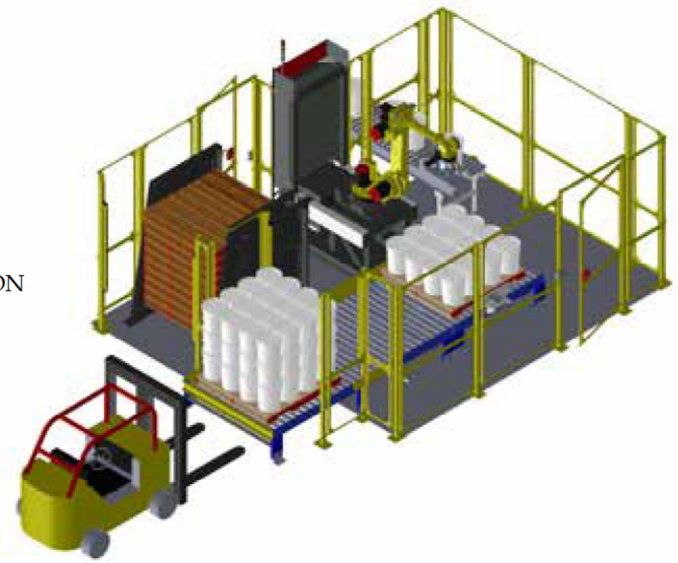

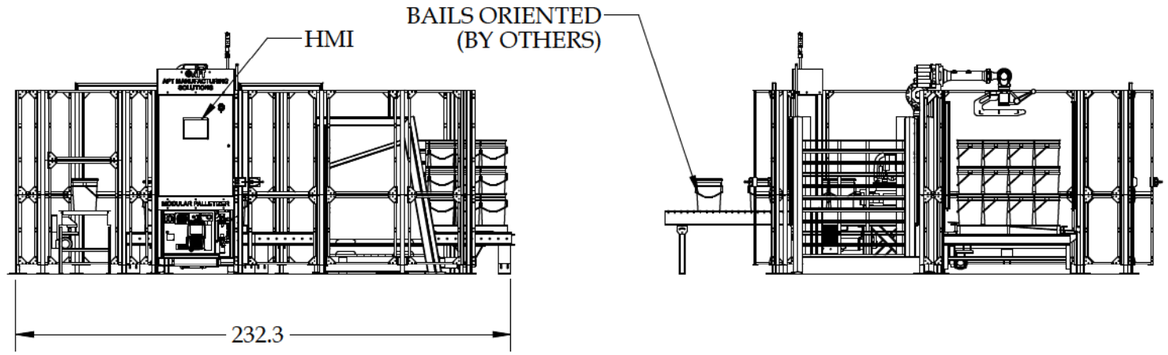

PRELIMINARY
PALLET MAGAZINE OPTION

CONCEPTUAL USE ONLY
DO NOT USE FOR CONSTRUCTION
FIRM DIMENSIONS TO BE FINALIZED DURING
FINAL ENGINEERING REVIEW.

REVISIONS				
ZONE	REV.	DESCRIPTION	DATE	APPROVED

TOLERANCES UNLESS OTHERWISE SPECIFIED: FRACTIONAL ±1/16" THIRD ANGLE PROJECTION .X ±0.030" .XX ±0.010" .XXX ±0.005" .XXXX ±0.0005" ANGLE: MACH ±0.5° BEND ±1°	DESIGNED BY: Bill Buck	APT MANUFACTURING solutions	THIS PRINT IS PROPERTY OF APT MANUFACTURING SOLUTIONS, HICKSVILLE, OH AND IS LOANED TO THE RECIPIENT SUBJECT TO RETURN UPON DEMAND. CONTENTS ARE COPYRIGHTED AND MUST NOT BE REPRODUCED IN ANY WAY WITHOUT PERMISSION.
	DATE: 12/31/2019		
	SHEET 1 OF 2	PART/ASSY DESCRIPTION: Pail Palletizer	
	DO NOT SCALE DRAWING		
UNLESS OTHERWISE SPECIFIED: -BREAK ALL EDGES 1/32" -ALL SURFACES SQ WITHIN 0.002" -ALL DIAMETERS CONCENTRIC WITHIN 0.002" -STAMP PART NO. ON NON-WORKING SURFACE	WEIGHT: N/A	PART/DRW NO: 218404FL	CODE: A / REVISION: -
CAD IS MASTER	MATERIAL: See Drawing BOM	PART SIZE: N/A	
	MATERIAL FINISH: N/A		

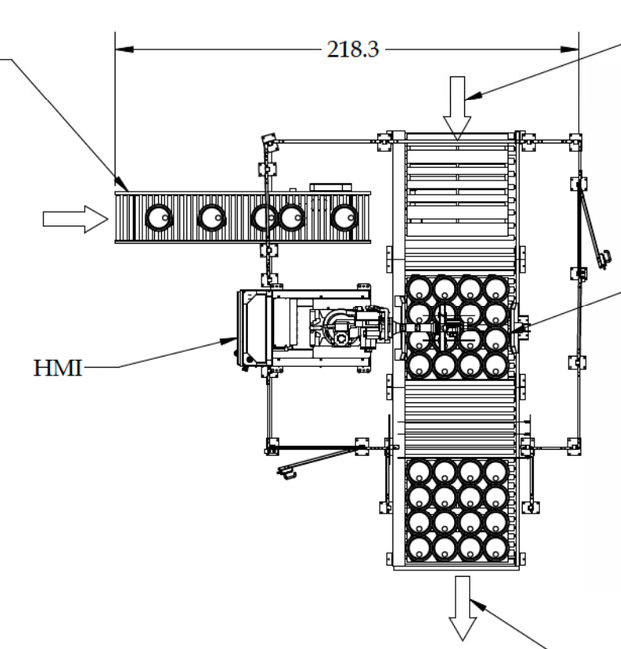

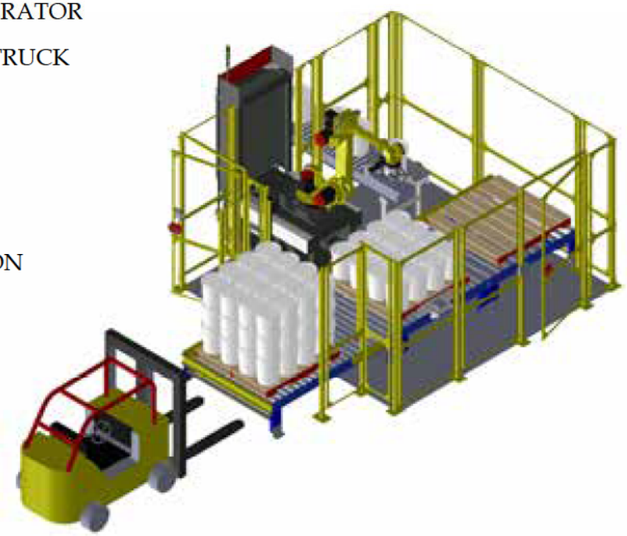

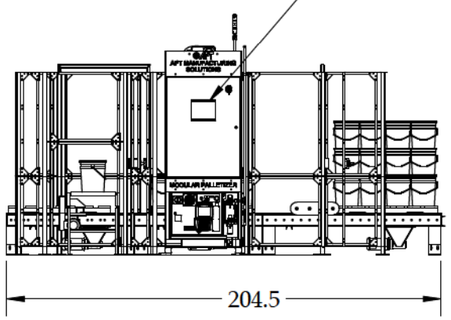

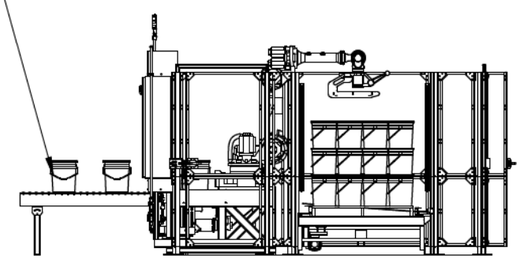

PRELIMINARY
PASS THRU OPTION

CONCEPTUAL USE ONLY
DO NOT USE FOR CONSTRUCTION
FIRM DIMENSIONS TO BE FINALIZED DURING
FINAL ENGINEERING REVIEW.

ZONE	REV.	DESCRIPTION	DATE	APPROVED
		REVISIONS		

TOLERANCES
UNLESS OTHERWISE SPECIFIED:
FRACTIONAL ±1/16" THIRD ANGLE PROJECTION
.X ±0.030"
.XX ±0.010"
.XXX ±0.005"
.XXXX ±0.0005"
ANGLE: MACH ±0.5°
BEND ±1°

UNLESS OTHERWISE SPECIFIED:
- BREAK ALL EDGES 1/32"
- ALL SURFACES SQ WITHIN 0.002"
- ALL DIAMETERS CONCENTRIC WITHIN 0.002"
- STAMP PART NO. ON NON-WORKING SURFACE

CAD IS MASTER

DESIGNED BY: Bill Buck
DATE: 12/31/2019
SHEET 2 OF 2
DO NOT SCALE DRAWING
WEIGHT: N/A
MATERIAL: See Drawing BOM
MATERIAL FINISH: N/A

APT MANUFACTURING solutions
THIS PRINT IS PROPERTY OF APT MANUFACTURING SOLUTIONS, HICKSVILLE, OH AND IS LOANED TO THE RECIPIENT SUBJECT TO RETURN UPON DEMAND. CONTENTS ARE COPYRIGHTED AND MUST NOT BE REPRODUCED IN ANY WAY WITHOUT PERMISSION.

PART/ASSY DESCRIPTION: Pail Palletizer
PART/DRW NO: 218404FL
CODE: A
REVISION: -
PART SIZE: N/A

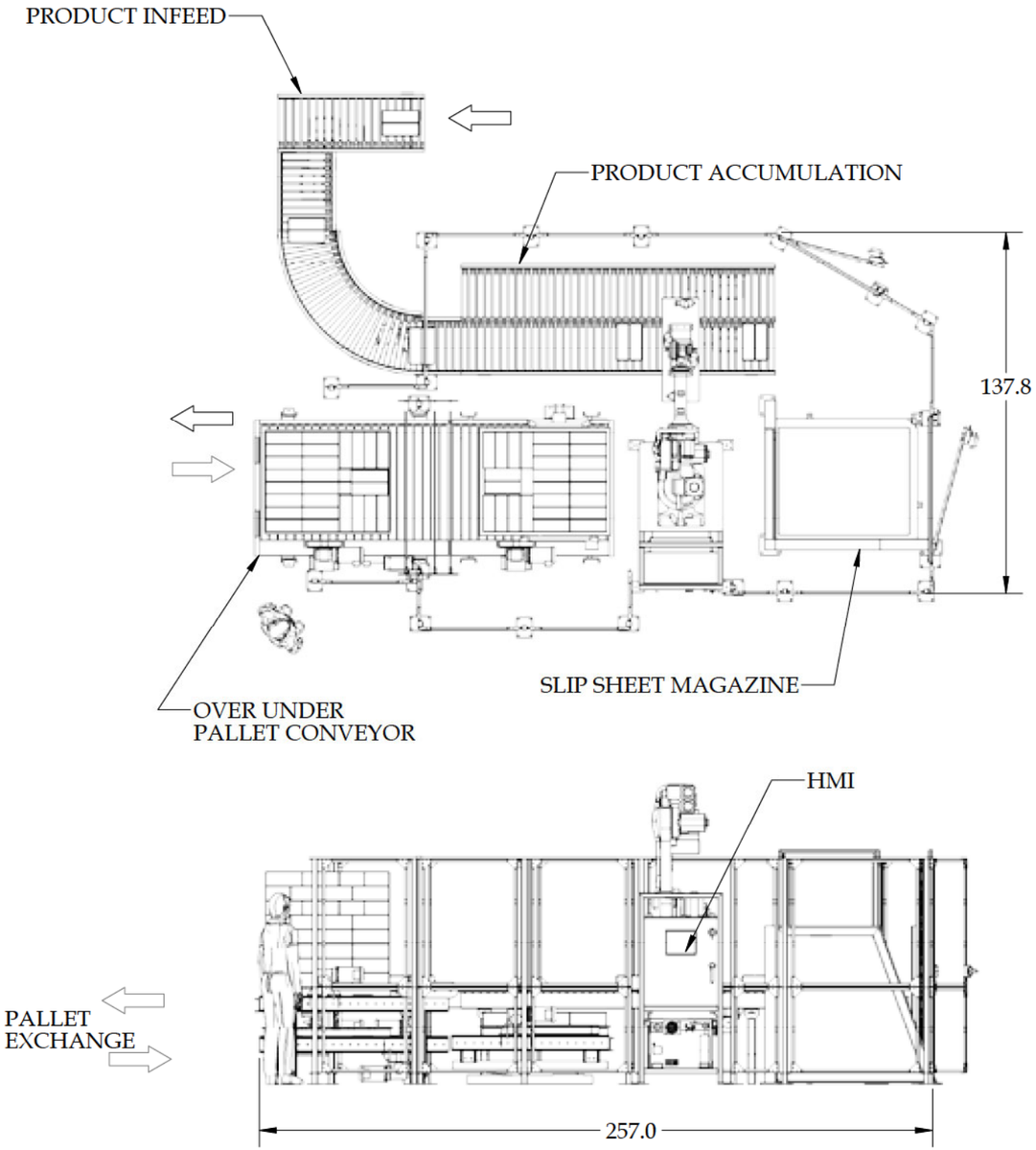

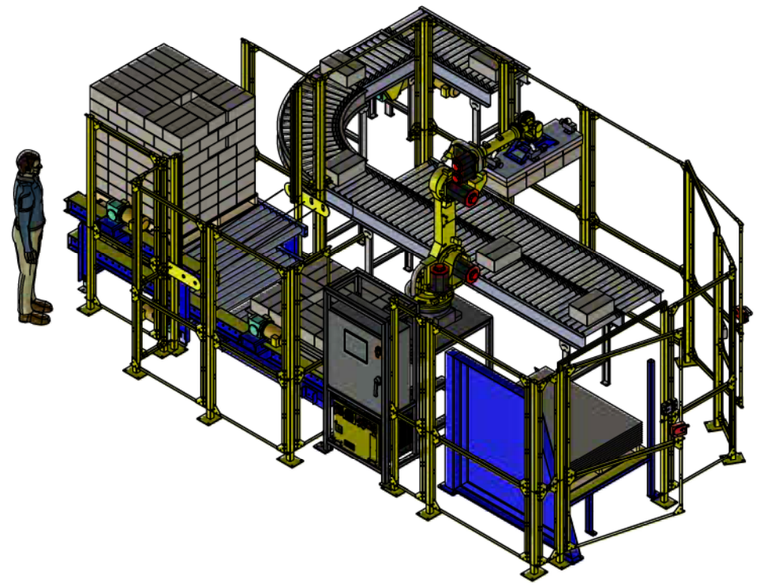

CONCEPTUAL USE ONLY
DO NOT USE FOR CONSTRUCTION
FIRM DIMENSIONS TO BE FINALIZED DURING
FINAL ENGINEERING REVIEW.

ZONE	REV.	DESCRIPTION	DATE	APPROVED
		REVISIONS		

TOLERANCES
UNLESS OTHERWISE SPECIFIED:
FRACTIONAL ±1/16" THIRD ANGLE PROJECTION
.X ±0.030"
.XX ±0.010"
.XXX ±0.005"
.XXXX ±0.0005"
ANGLE: MACH ±0.5°
BEND ±1°

UNLESS OTHERWISE SPECIFIED:
-BREAK ALL EDGES 1/32"
-ALL SURFACES SQ WITHIN 0.002"
-ALL DIAMETERS CONCENTRIC WITHIN 0.002"
-STAMP PART NO. ON NON-WORKING SURFACE

CAD IS MASTER

DESIGNED BY: Bill Buck
DATE: 08/07/2019
SHEET 1 OF 1
DO NOT SCALE DRAWING
WEIGHT: N/A
MATERIAL: See Drawing BOM
MATERIAL FINISH: N/A

THIS PRINT IS PROPERTY OF APT MANUFACTURING SOLUTIONS, HICKSVILLE, OH AND IS LOANED TO THE RECIPIENT SUBJECT TO RETURN UPON DEMAND. CONTENTS ARE COPYRIGHTED AND MUST NOT BE REPRODUCED IN ANY WAY WITHOUT PERMISSION.

PART/ASSY DESCRIPTION: Over Under Palletizer
PART/DRW NO: 217595FLR1
CODE: A
REVISION: -
PART SIZE: N/A

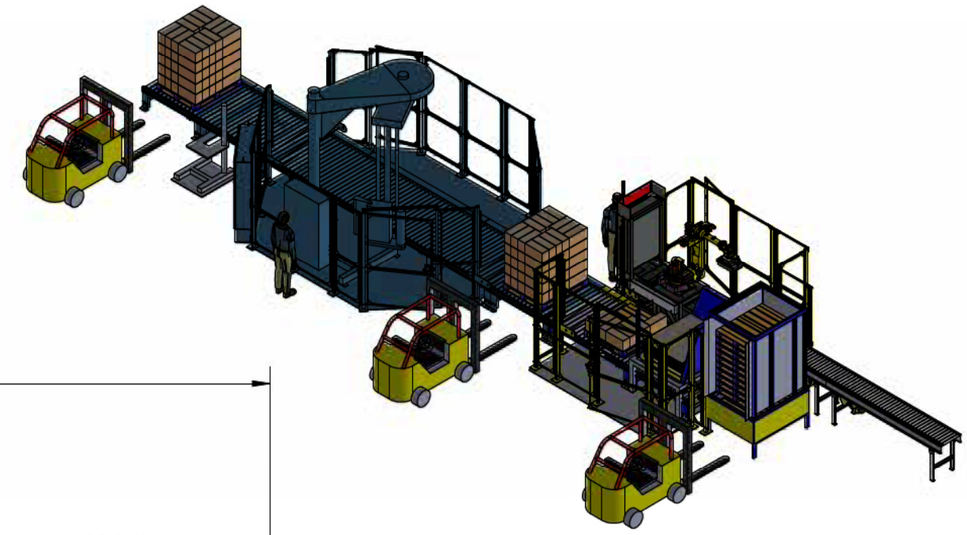

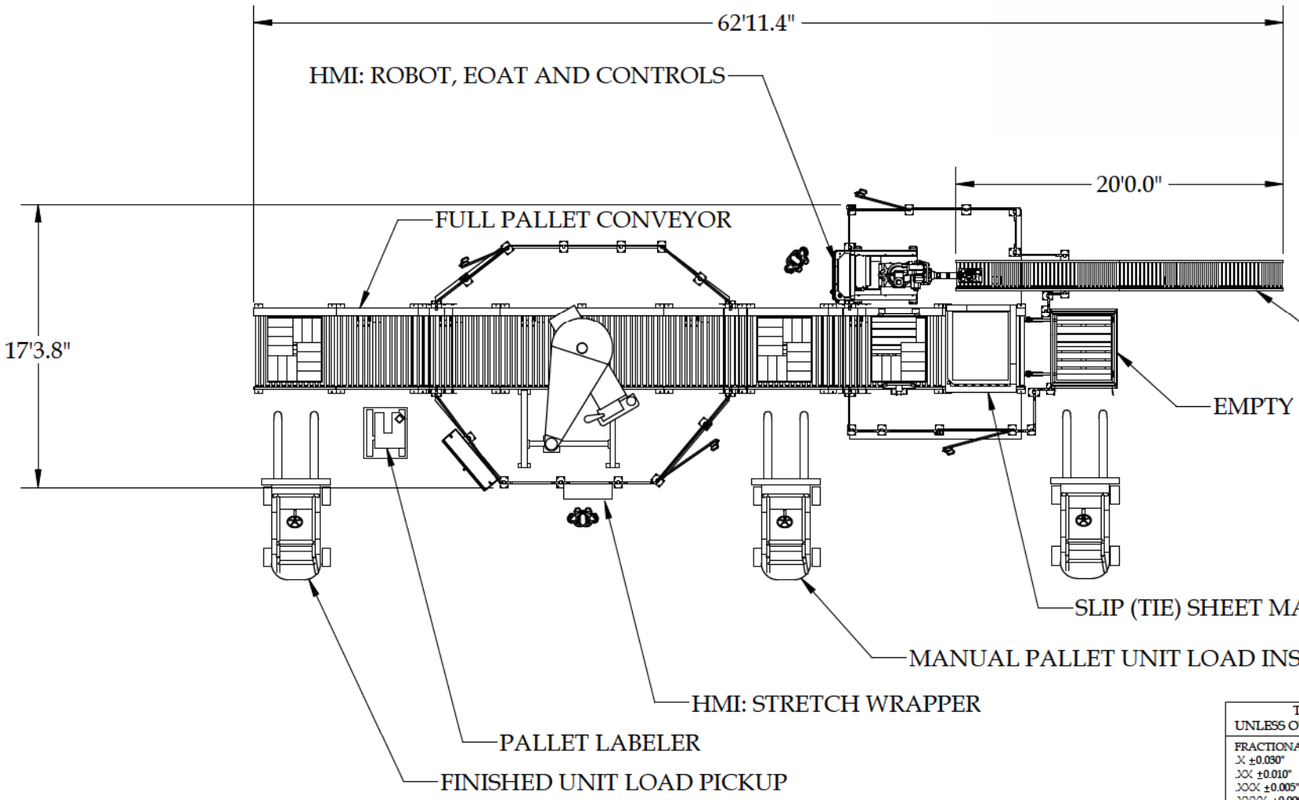

CONCEPTUAL USE ONLY
DO NOT USE FOR CONSTRUCTION
FIRM DIMENSIONS TO BE FINALIZED DURING FINAL ENGINEERING REVIEW.

ZONE	REV.	DESCRIPTION	DATE	APPROVED
REVISIONS				

TOLERANCES
UNLESS OTHERWISE SPECIFIED:
FRACTIONAL ±1/16" THIRD ANGLE PROJECTION
.X ±0.030"
.XX ±0.010"
.XXX ±0.005"
.XXXX ±0.0005"
ANGLE: MACH ±0.5°
BEND ±1°

UNLESS OTHERWISE SPECIFIED:
-BREAK ALL EDGES 1/32"
-ALL SURFACES SQ WITHIN 0.002"
-ALL DIAMETERS CONCENTRIC WITHIN 0.002"
-STAMP PART NO. ON NON-WORKING SURFACE

CAD IS MASTER

DESIGNED BY: Bill buck
DATE: 08/29/2019
SHEET 1 OF 1
DO NOT SCALE DRAWING
WEIGHT: N/A
MATERIAL: See Drawing BOM
MATERIAL FINISH: N/A

APT MANUFACTURING solutions

THIS PRINT IS PROPERTY OF APT MANUFACTURING SOLUTIONS, HICKSVILLE, OH AND IS LOANED TO THE RECIPIENT SUBJECT TO RETURN UPON DEMAND. CONTENTS ARE COPYRIGHTED AND MUST NOT BE REPRODUCED IN ANY WAY WITHOUT PERMISSION.

PART/ASSY DESCRIPTION: Unit Load Former System

PART/DRW NO:	CODE:	REVISION:
217951FLR	A	-

PART SIZE: N/A

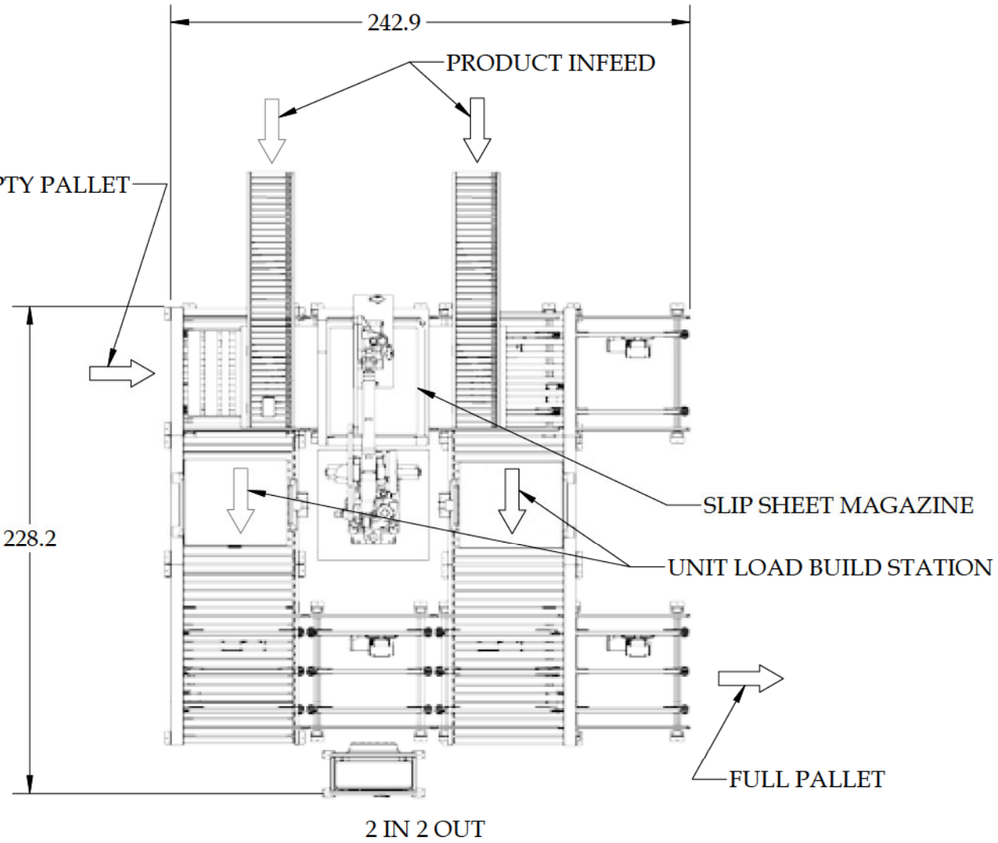

2 IN 2 OUT

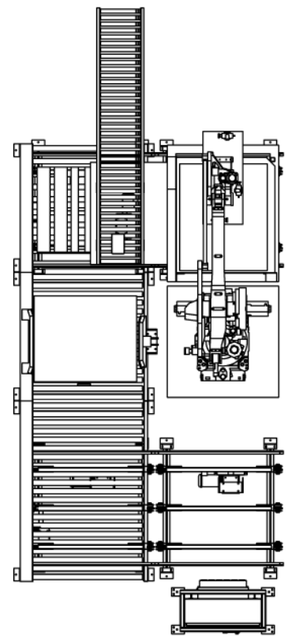

1 IN 1 OUT

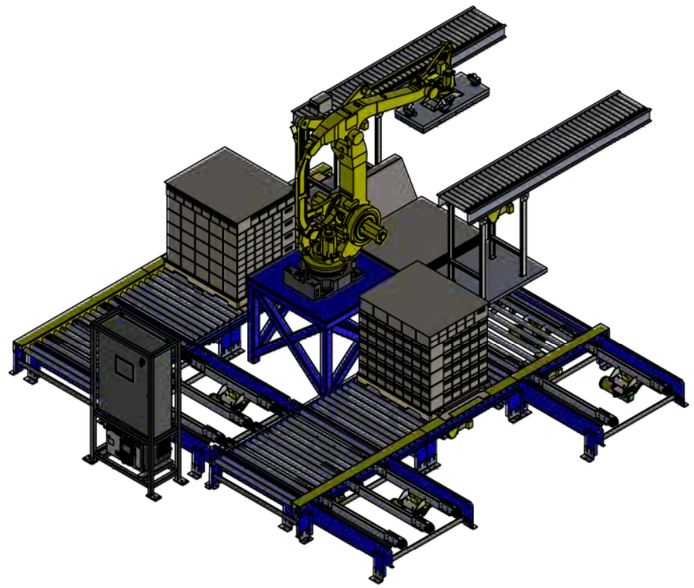

GUARDING NOT SHOWN

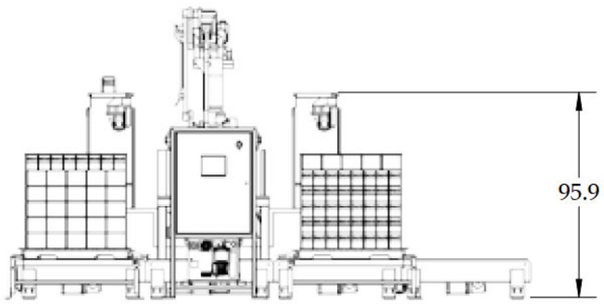

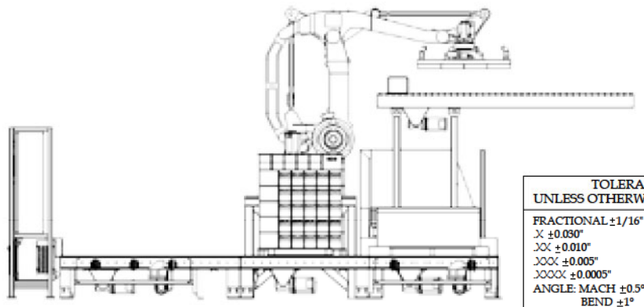

CONCEPTUAL USE ONLY
DO NOT USE FOR CONSTRUCTION
FIRM DIMENSIONS TO BE FINALIZED DURING FINAL ENGINEERING REVIEW.

ZONE	REV.	DESCRIPTION	DATE	APPROVED
		REVISIONS		

TOLERANCES
UNLESS OTHERWISE SPECIFIED:
FRACTIONAL ±1/16"
X ±0.030"
XX ±0.010"
XXX ±0.005"
XXXX ±0.0005"
ANGLE: MACH ±0.5°
BEND ±1°
THIRD ANGLE PROJECTION

UNLESS OTHERWISE SPECIFIED:
-BREAK ALL EDGES 1/32"
-ALL SURFACES SQ WITHIN 0.002"
-ALL DIAMETERS CONCENTRIC WITHIN 0.002"
-STAMP PART NO. ON NON-WORKING SURFACE

CAD IS MASTER

DESIGNED BY: Bill Buck
DATE: 09/17/19
SHEET 1 OF 1
DO NOT SCALE DRAWING
WEIGHT: NA
MATERIAL: See Drawing BOM
MATERIAL FINISH: N/A
PART SIZE: N/A

APT MANUFACTURING solutions

THIS PRINT IS PROPERTY OF APT MANUFACTURING SOLUTIONS, HICKSVILLE, OH AND IS LOANED TO THE RECIPIENT SUBJECT TO RETURN UPON DEMAND. CONTENTS ARE COPYRIGHTED AND MUST NOT BE REPRODUCED IN ANY WAY WITHOUT PERMISSION.

PART/ASSY DESCRIPTION: Palletizer Cell
PART/DRW NO: 218022FLR
CODE: A
REVISION: -

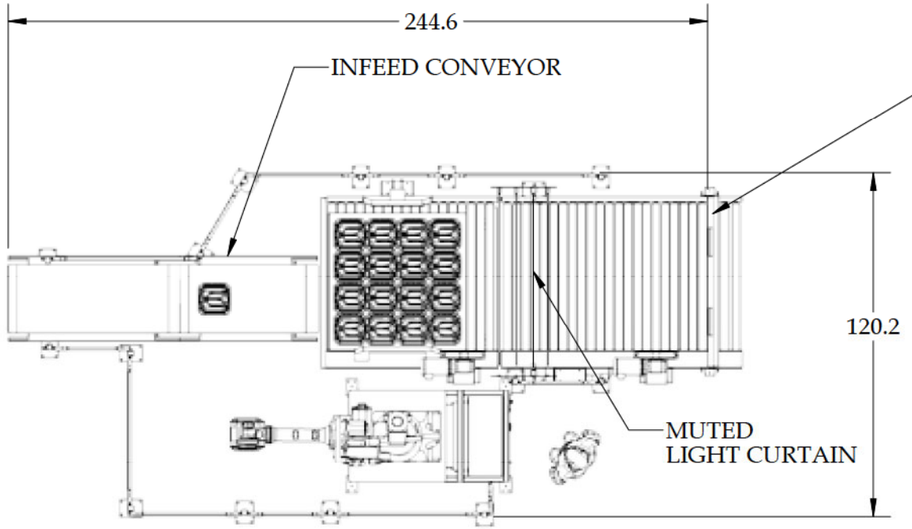

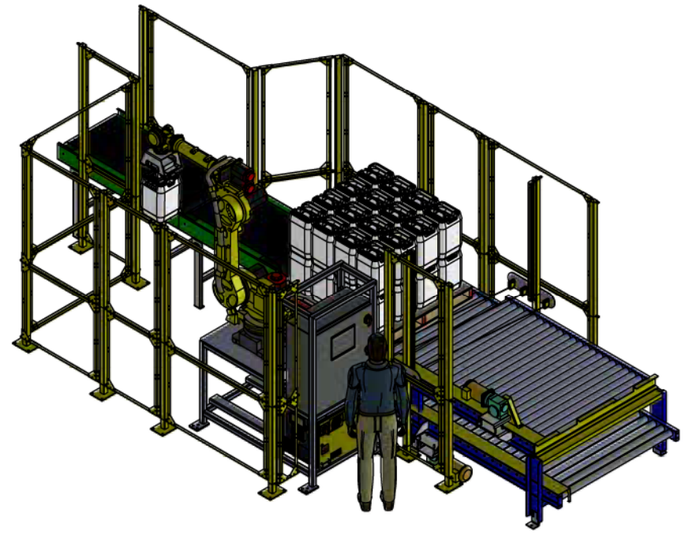

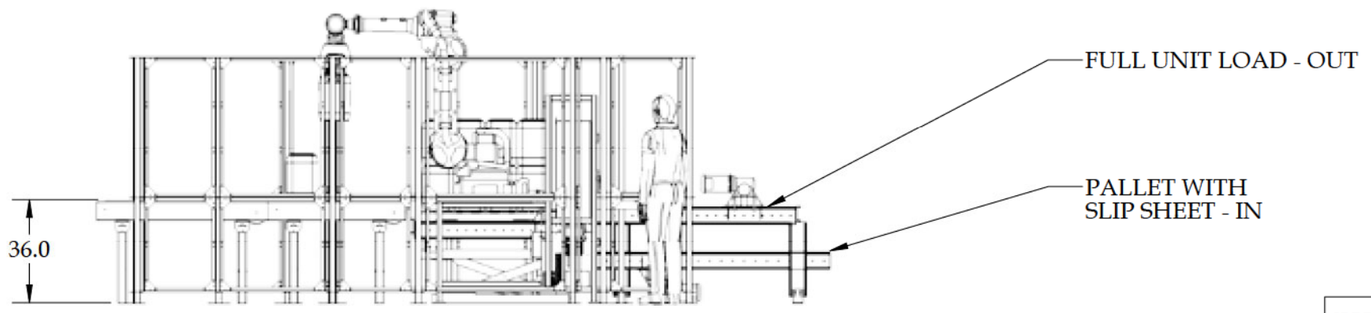

ZONE	REV.	DESCRIPTION	DATE	APPROVED
REVISIONS				

TOLERANCES
UNLESS OTHERWISE SPECIFIED:
FRACTIONAL ±1/16" THIRD ANGLE PROJECTION
.X ±0.030"
.XX ±0.010"
.XXX ±0.005"
.XXXX ±0.0005"
ANGLE: MACH ±0.5°
BEND ±1°

UNLESS OTHERWISE SPECIFIED:
-BREAK ALL EDGES 1/32"
-ALL SURFACES SQ WITHIN 0.002"
-ALL DIAMETERS CONCENTRIC WITHIN 0.002"
-STAMP PART NO. ON NON-WORKING SURFACE

CAD IS MASTER

DESIGNED BY: Bill Buck
DATE: 03/05/2019
SHEET 1 OF 1
DO NOT SCALE DRAWING
WEIGHT: N/A

APT MANUFACTURING solutions

THIS PRINT IS PROPERTY OF APT MANUFACTURING SOLUTIONS, HICKSVILLE, OH AND IS LOANED TO THE RECIPIENT SUBJECT TO RETURN UPON DEMAND. CONTENTS ARE COPYRIGHTED AND MUST NOT BE REPRODUCED IN ANY WAY WITHOUT PERMISSION.

PART/ASSY DESCRIPTION: 1 IN 1 Out Palletizer With Over Under

PART/DRW NO:	CODE:	REVISION:
217430FLR-OU	A	-

MATERIAL: See Drawing BOM
PART SIZE: N/A
MATERIAL FINISH: N/A

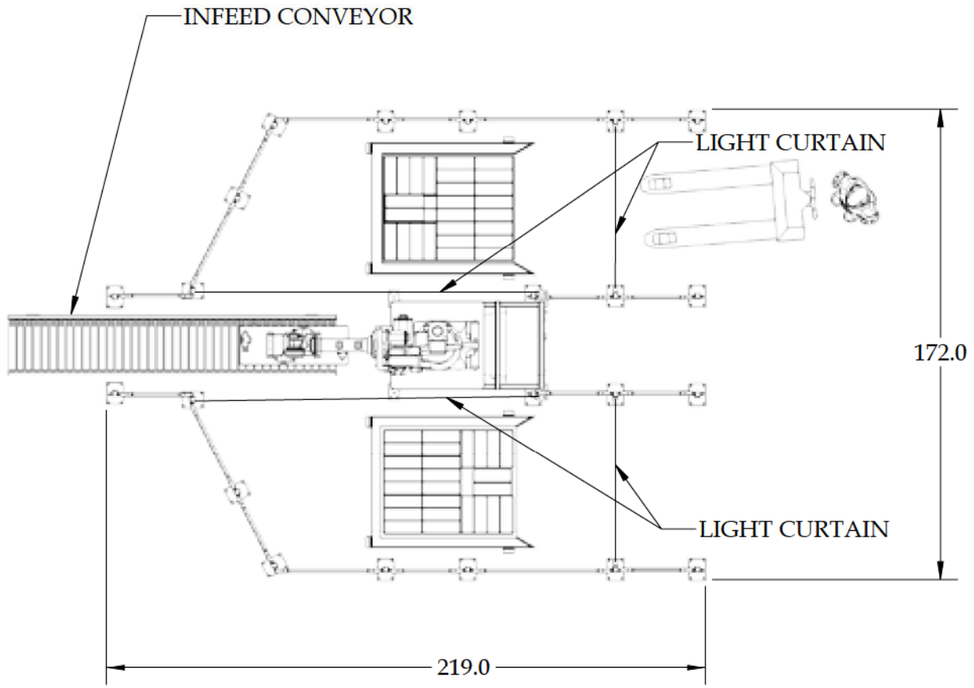

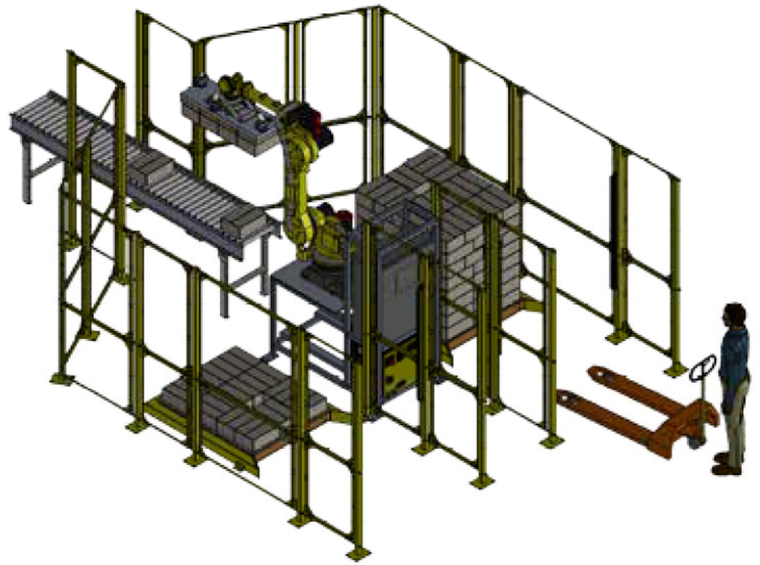

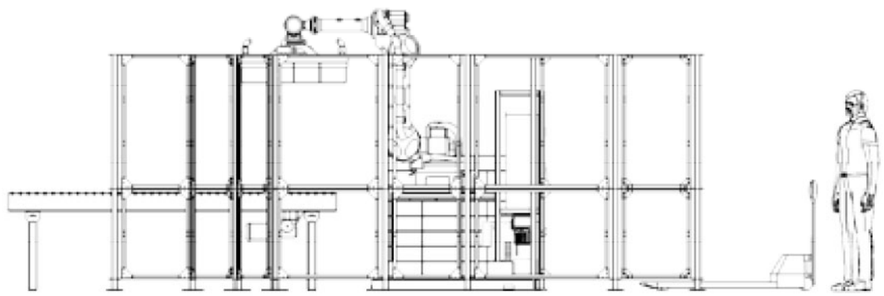

ZONE	REV.	DESCRIPTION	DATE	APPROVED
REVISIONS				

TOLERANCES
UNLESS OTHERWISE SPECIFIED:
FRACTIONAL ±1/16" THIRD ANGLE PROJECTION
.X ±0.030"
.XX ±0.010"
.XXX ±0.005"
.XXXX ±0.0005"
ANGLE: MACH ±0.5°
BEND ±1°

UNLESS OTHERWISE SPECIFIED:
-BREAK ALL EDGES 1/32"
-ALL SURFACES SQ WITHIN 0.002"
-ALL DIAMETERS CONCENTRIC WITHIN 0.002"
-STAMP PART NO. ON NON-WORKING SURFACE

CAD IS MASTER

DESIGNED BY: Bill Buck
DATE: 05/13/2019
SHEET 1 OF 1
DO NOT SCALE DRAWING
WEIGHT: N/A
MATERIAL: See Drawing BOM
MATERIAL FINISH: N/A

APT MANUFACTURING solutions

THIS PRINT IS PROPERTY OF APT MANUFACTURING SOLUTIONS, HICKSVILLE, OH AND IS LOANED TO THE RECIPIENT SUBJECT TO RETURN UPON DEMAND. CONTENTS ARE COPYRIGHTED AND MUST NOT BE REPRODUCED IN ANY WAY WITHOUT PERMISSION.

PART/ASSY DESCRIPTION: 1 IN 2 Out Palletizer
PART/DRW NO: 217595FLR
CODE: A
REVISION: -
PART SIZE: N/A

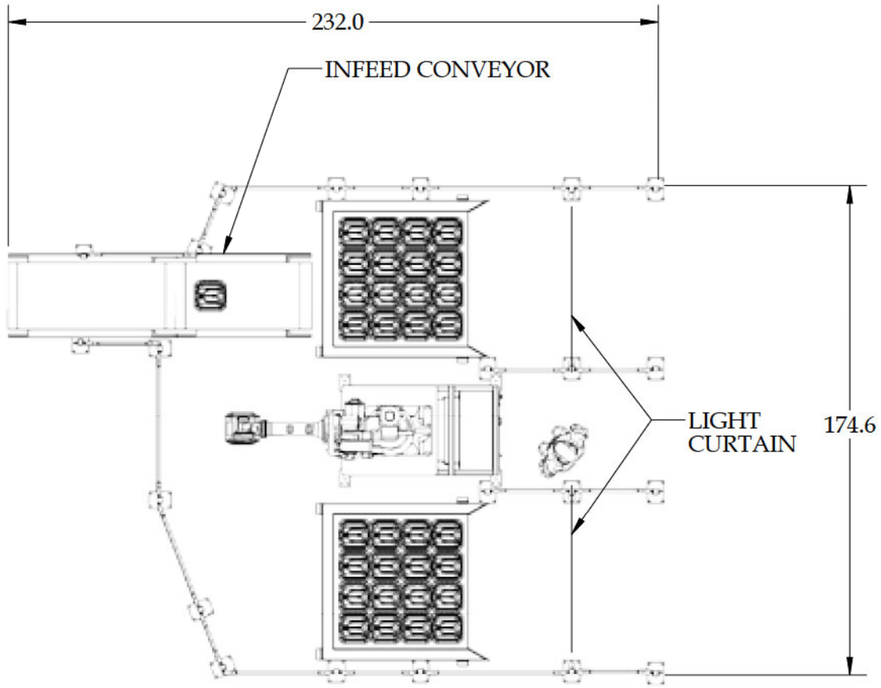

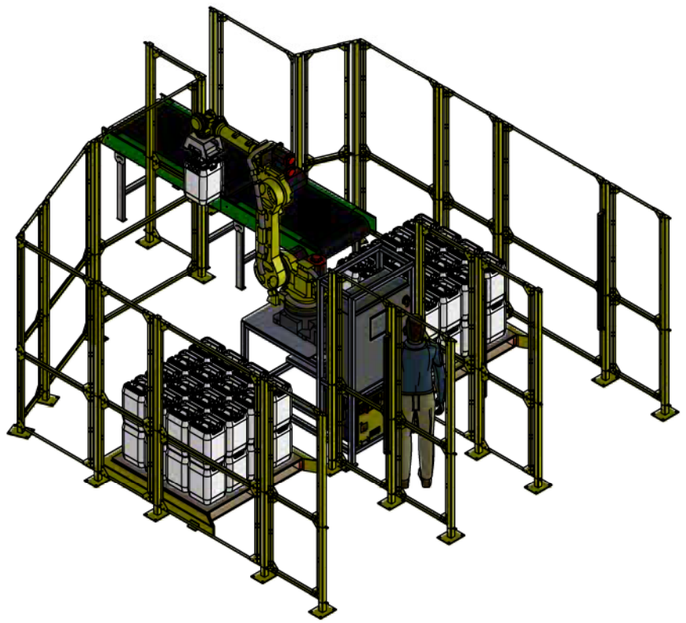

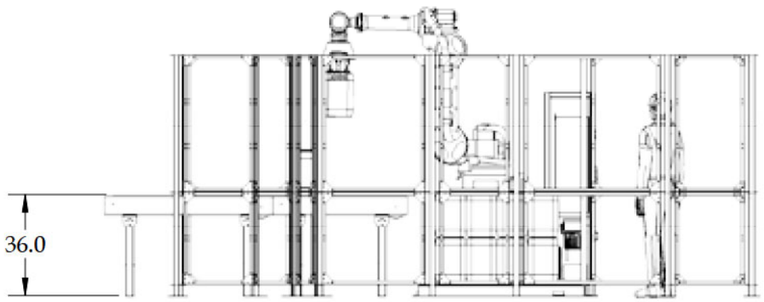

ZONE	REV.	DESCRIPTION	DATE	APPROVED
REVISIONS				

TOLERANCES
UNLESS OTHERWISE SPECIFIED:
FRACTIONAL ±1/16"
X ±0.030"
XX ±0.010"
XXX ±0.005"
XXXX ±0.0005"
ANGLE: MACH ±0.5°
BEND ±1°
THIRD ANGLE PROJECTION

UNLESS OTHERWISE SPECIFIED:
-BREAK ALL EDGES 1/32"
-ALL SURFACES SQ WITHIN 0.002"
-ALL DIAMETERS CONCENTRIC WITHIN 0.002"
-STAMP PART NO. ON NON-WORKING SURFACE

CAD IS MASTER

DESIGNED BY: Bill Buck
DATE: 03/05/2019
SHEET 1 OF 1
DO NOT SCALE DRAWING
WEIGHT: N/A
MATERIAL: See Drawing BOM
MATERIAL FINISH: N/A

APT MANUFACTURING solutions

THIS PRINT IS PROPERTY OF APT MANUFACTURING SOLUTIONS, HICKSVILLE, OH AND IS LOANED TO THE RECIPIENT SUBJECT TO RETURN UPON DEMAND. CONTENTS ARE COPYRIGHTED AND MUST NOT BE REPRODUCED IN ANY WAY WITHOUT PERMISSION.

PART/ASSY DESCRIPTION: 1 IN 2 Out Palletizer With Floor Discharge

PART/DRW NO:	CODE:	REVISION:
217430FLR-2FL	A	-

PART SIZE: N/A

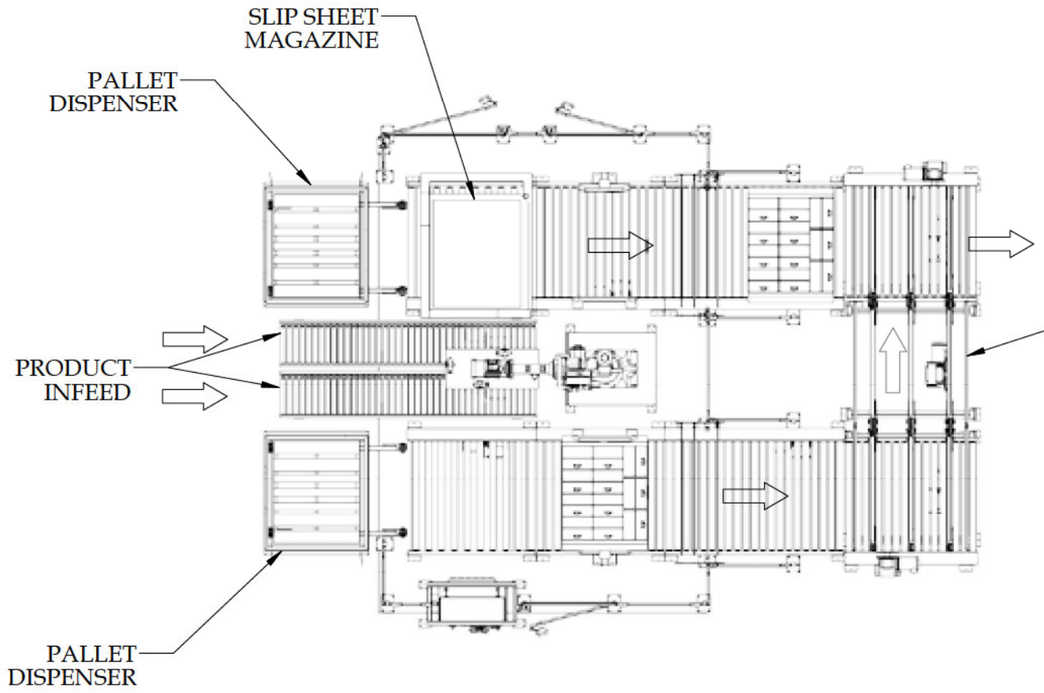

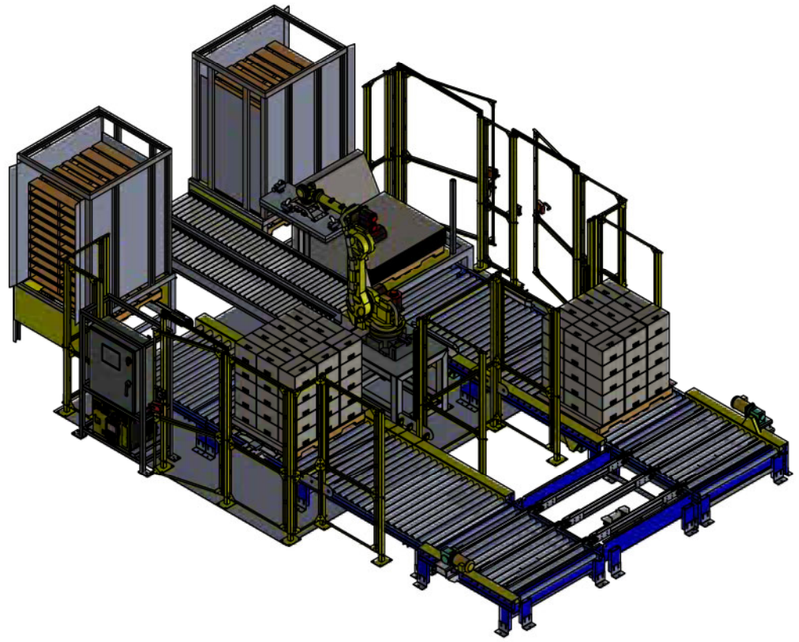

PRELIMINARY SHOWN WITH:

- 2:1 PALLET MERGE
- PALLET DISPENSER
- SLIP SHEET MAGAZINE
- PALLET CONVEYORS

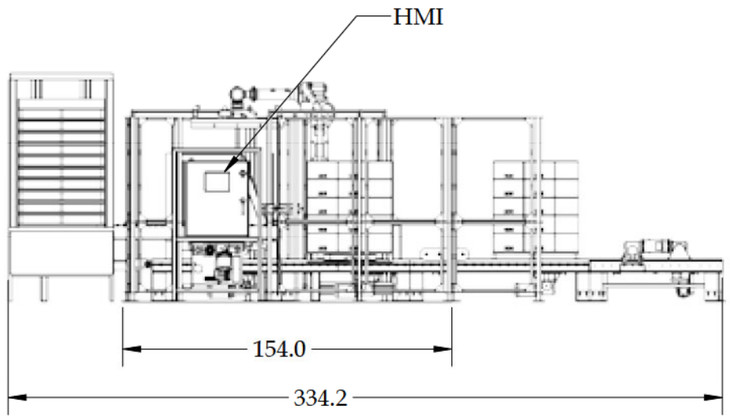

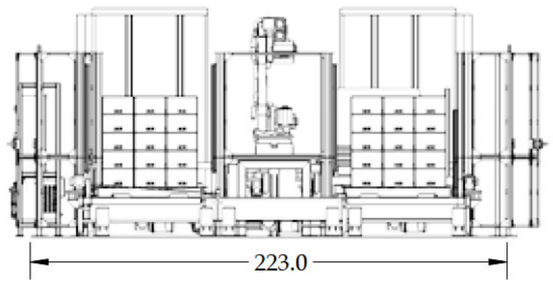

CONCEPTUAL USE ONLY
DO NOT USE FOR CONSTRUCTION
FIRM DIMENSIONS TO BE FINALIZED DURING FINAL ENGINEERING REVIEW.

ZONE	REV.	DESCRIPTION	DATE	APPROVED
REVISIONS				

TOLERANCES UNLESS OTHERWISE SPECIFIED:
FRACTIONAL ±1/16" THIRD ANGLE PROJECTION
.X ±0.030"
.XX ±0.010"
.XXX ±0.005"
.XXXX ±0.0005"
ANGLE: MACH ±0.5° BEND ±1°

UNLESS OTHERWISE SPECIFIED:
-BREAK ALL EDGES 1/32"
-ALL SURFACES SQ WITHIN 0.002"
-ALL DIAMETERS CONCENTRIC WITHIN 0.002"
-STAMP PART NO. ON NON-WORKING SURFACE

CAD IS MASTER

DESIGNED BY: Bill Buck
DATE: 12/17/2019
SHEET 1 OF 5
DO NOT SCALE DRAWING
WEIGHT: NA
MATERIAL: See Drawing BOM
MATERIAL FINISH: N/A

APT MANUFACTURING solutions

THIS PRINT IS PROPERTY OF APT MANUFACTURING SOLUTIONS, HICKSVILLE, OH AND IS LOANED TO THE RECIPIENT SUBJECT TO RETURN UPON DEMAND. CONTENTS ARE COPYRIGHTED AND MUST NOT BE REPRODUCED IN ANY WAY WITHOUT PERMISSION.

PART/ASSY DESCRIPTION: 2 IN 2 Out Palletizer
PART/DRW NO: 218389FLR
CODE: A
REVISION: -
PART SIZE: N/A

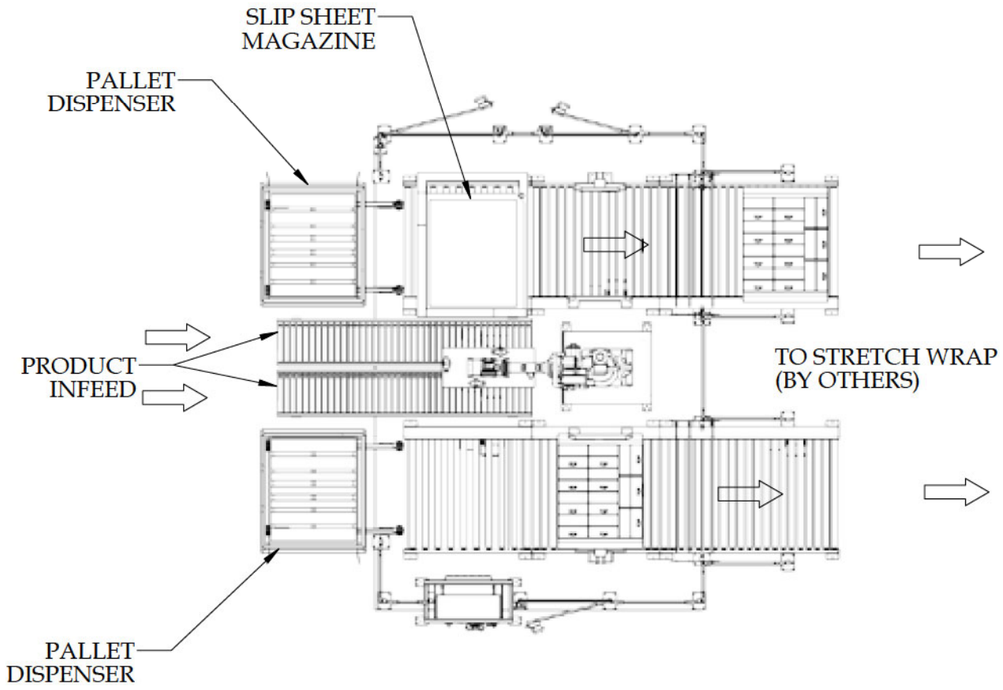

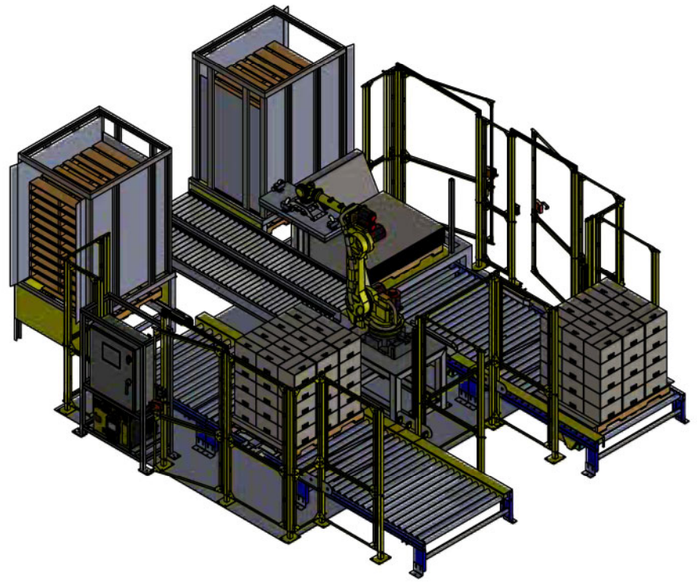

PRELIMINARY SHOWN WITH:

- PALLET DISPENSER
- SLIP SHEET MAGAZINE
- PALLET CONVEYORS

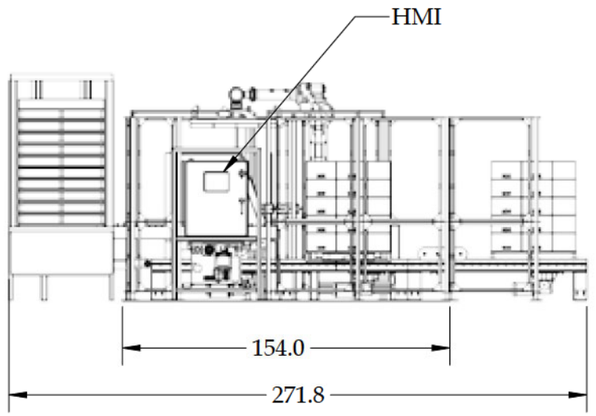

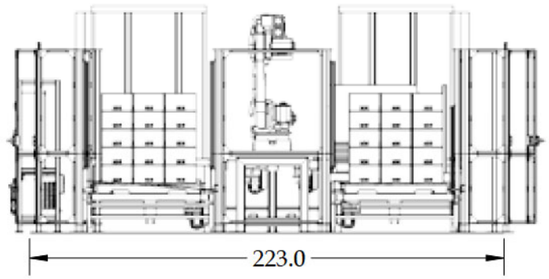

CONCEPTUAL USE ONLY
DO NOT USE FOR CONSTRUCTION
FIRM DIMENSIONS TO BE FINALIZED DURING FINAL ENGINEERING REVIEW.

ZONE	REV.	DESCRIPTION	DATE	APPROVED
		REVISIONS		

TOLERANCES UNLESS OTHERWISE SPECIFIED:
FRACTIONAL ±1/16" THIRD ANGLE PROJECTION
.X ±0.030"
.XX ±0.010"
.XXX ±0.005"
.XXXX ±0.0005"
ANGLE: MACH ±0.5° BEND ±1°

UNLESS OTHERWISE SPECIFIED:
-BREAK ALL EDGES 1/32"
-ALL SURFACES SQ WITHIN 0.002"
-ALL DIAMETERS CONCENTRIC WITHIN 0.002"
-STAMP PART NO. ON NON-WORKING SURFACE

CAD IS MASTER

DESIGNED BY: Bill Buck
DATE: 12/17/2019
SHEET 2 OF 5
DO NOT SCALE DRAWING
WEIGHT: NA
MATERIAL: See Drawing BOM
MATERIAL FINISH: N/A

APT MANUFACTURING solutions

THIS PRINT IS PROPERTY OF APT MANUFACTURING SOLUTIONS, HICKSVILLE, OH AND IS LOANED TO THE RECIPIENT SUBJECT TO RETURN UPON DEMAND. CONTENTS ARE COPYRIGHTED AND MUST NOT BE REPRODUCED IN ANY WAY WITHOUT PERMISSION.

PART/ASSY DESCRIPTION: 2 IN 2 Out Palletizer
PART/DRW NO: 218389FLR
CODE: A
REVISION: -
PART SIZE: N/A

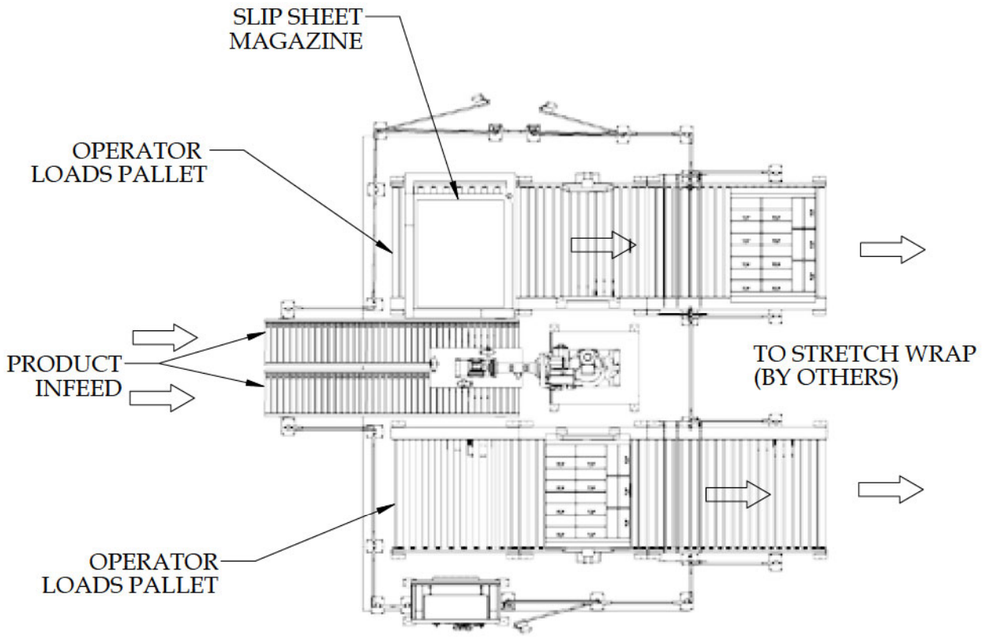

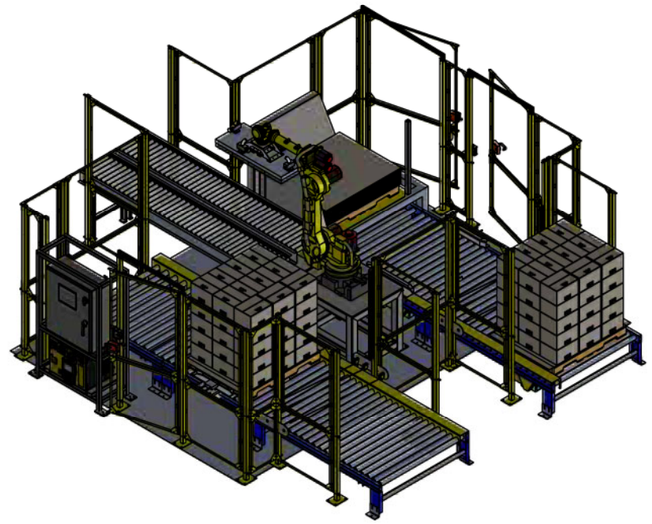

PRELIMINARY SHOWN WITH:

- SLIP SHEET MAGAZINE
- PALLET CONVEYORS (PASS THRU)

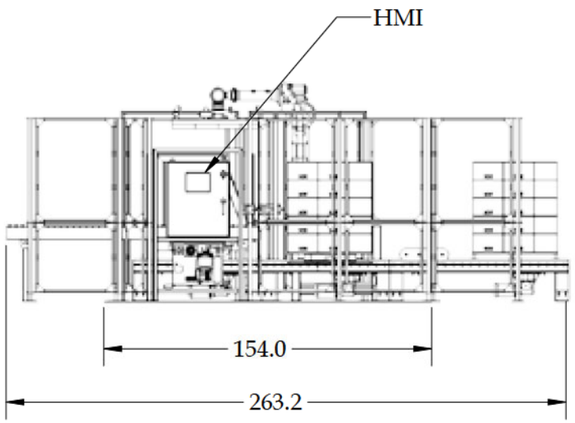

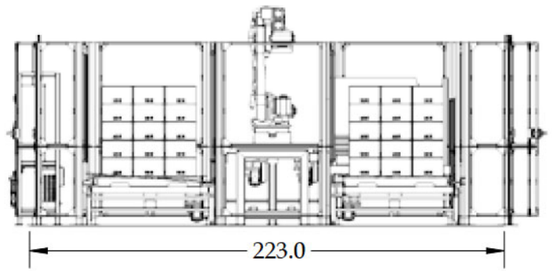

CONCEPTUAL USE ONLY
DO NOT USE FOR CONSTRUCTION
FIRM DIMENSIONS TO BE FINALIZED DURING FINAL ENGINEERING REVIEW.

ZONE	REV.	DESCRIPTION	DATE	APPROVED
REVISIONS				

TOLERANCES UNLESS OTHERWISE SPECIFIED:
FRACTIONAL ±1/16" THIRD ANGLE PROJECTION
.X ±0.050"
.XX ±0.010"
.XXX ±0.005"
.XXXX ±0.0005"
ANGLE: MACH ±0.5° BEND ±1°

UNLESS OTHERWISE SPECIFIED:
-BREAK ALL EDGES 1/32"
-ALL SURFACES SQ WITHIN 0.002"
-ALL DIAMETERS CONCENTRIC WITHIN 0.002"
-STAMP PART NO. ON NON-WORKING SURFACE

CAD IS MASTER

DESIGNED BY: Bill Buck
DATE: 12/17/2019
SHEET 3 OF 5
DO NOT SCALE DRAWING
WEIGHT: NA
MATERIAL: See Drawing BOM
MATERIAL FINISH: N/A

APT MANUFACTURING solutions

THIS PRINT IS PROPERTY OF APT MANUFACTURING SOLUTIONS, HICKSVILLE, OH AND IS LOANED TO THE RECIPIENT SUBJECT TO RETURN UPON DEMAND. CONTENTS ARE COPYRIGHTED AND MUST NOT BE REPRODUCED IN ANY WAY WITHOUT PERMISSION.

PART/ASSY DESCRIPTION: 2 IN 2 Out Palletizer
PART/DRW NO: 218389FLR
CODE: A
REVISION: -
PART SIZE: N/A

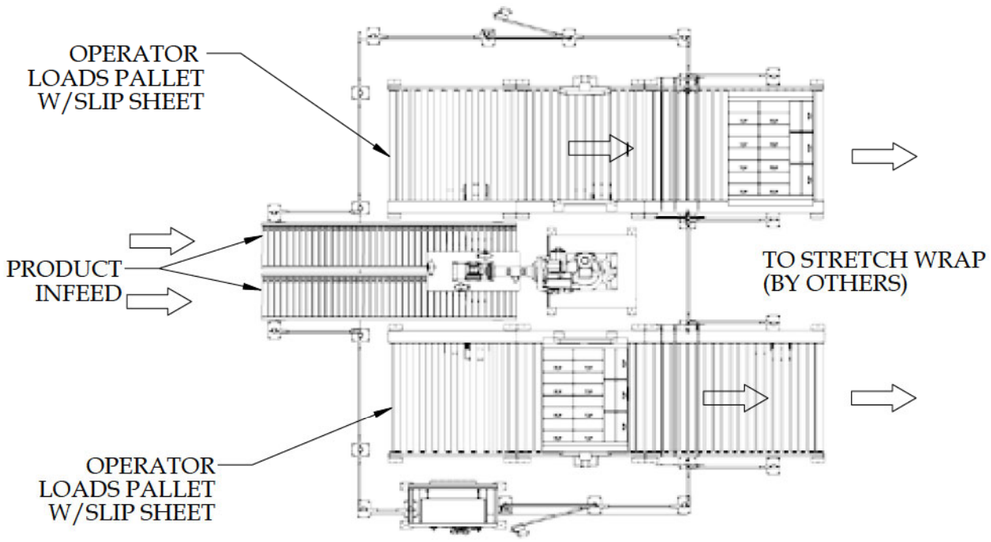

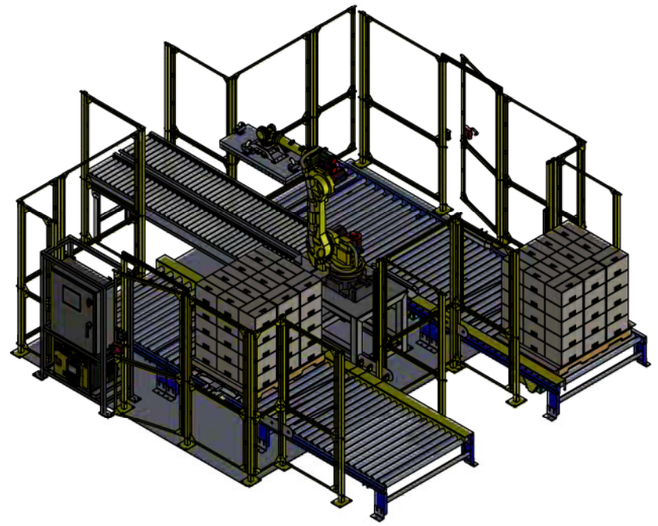

PRELIMINARY SHOWN WITH:

- PALLET CONVEYORS (PASS THRU)

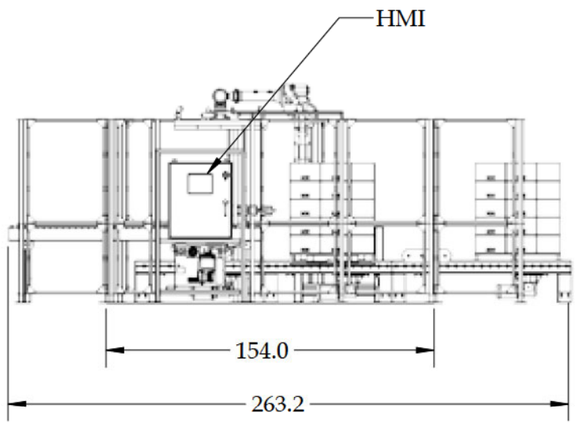

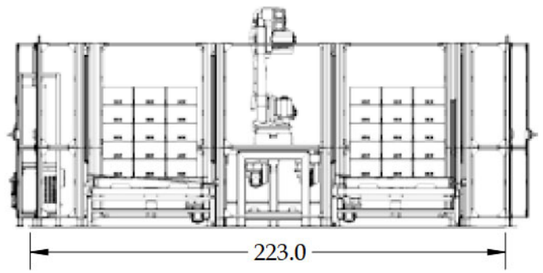

CONCEPTUAL USE ONLY
DO NOT USE FOR CONSTRUCTION
FIRM DIMENSIONS TO BE FINALIZED DURING
FINAL ENGINEERING REVIEW.

ZONE	REV.	DESCRIPTION	DATE	APPROVED
		REVISIONS		

TOLERANCES
UNLESS OTHERWISE SPECIFIED:
FRACTIONAL ±1/16" THIRD ANGLE PROJECTION
.X ±0.030"
.XX ±0.010"
.XXX ±0.005"
.XXXX ±0.0005"
ANGLE: MACH ±0.5°
BEND ±1°

UNLESS OTHERWISE SPECIFIED:
-BREAK ALL EDGES 1/32"
-ALL SURFACES SQ WITHIN 0.002"
-ALL DIAMETERS CONCENTRIC WITHIN 0.002"
-STAMP PART NO. ON NON-WORKING SURFACE

CAD IS MASTER

DESIGNED BY: Bill Buck
DATE: 12/17/2019
SHEET 4 OF 5
DO NOT SCALE DRAWING
WEIGHT: NA
MATERIAL: See Drawing BOM
MATERIAL FINISH: N/A

APT MANUFACTURING solutions

THIS PRINT IS PROPERTY OF APT MANUFACTURING SOLUTIONS, HICKSVILLE, OH AND IS LOANED TO THE RECIPIENT SUBJECT TO RETURN UPON DEMAND. CONTENTS ARE COPYRIGHTED AND MUST NOT BE REPRODUCED IN ANY WAY WITHOUT PERMISSION.

PART/ASSY DESCRIPTION: 2 IN 2 Out Palletizer

PART/DRW NO:	CODE:	REVISION:
218389FLR	A	-

PART SIZE: N/A

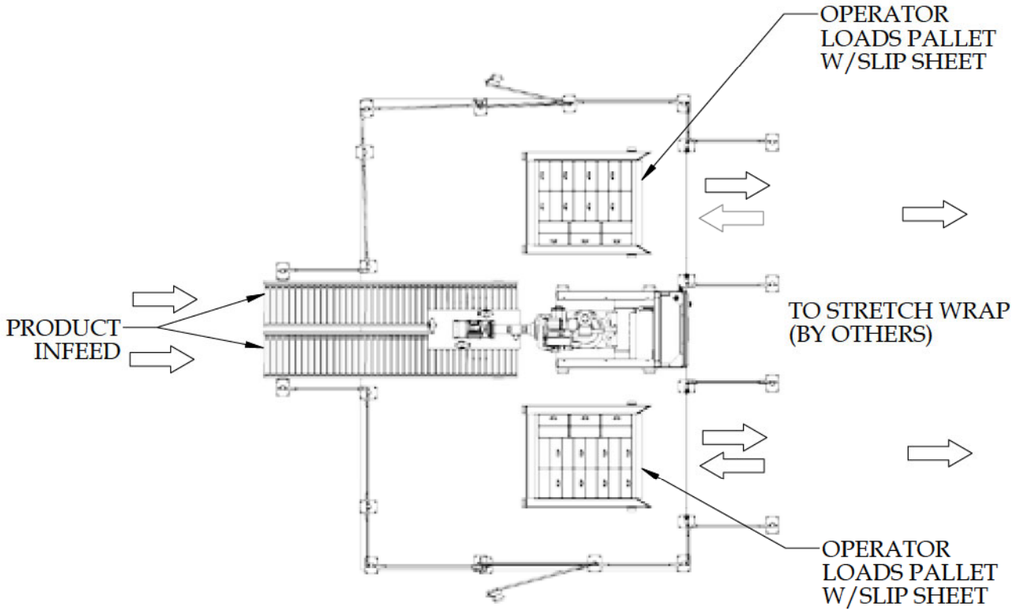

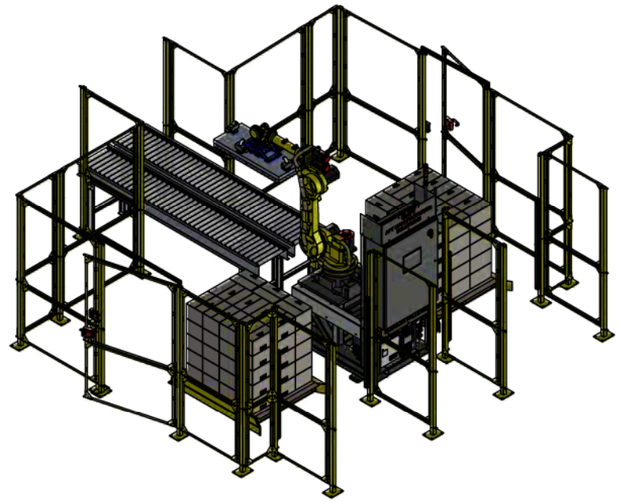

PRELIMINARY SHOWN WITH:

- FLOOR LEVEL PALLET CORRALS

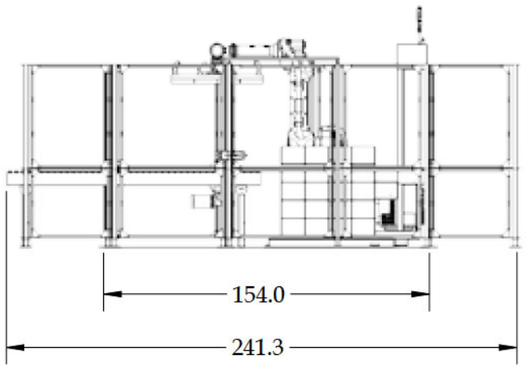

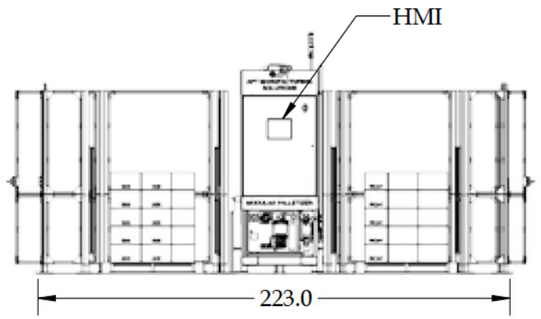

CONCEPTUAL USE ONLY
DO NOT USE FOR CONSTRUCTION
FIRM DIMENSIONS TO BE FINALIZED DURING
FINAL ENGINEERING REVIEW.

ZONE	REV.	DESCRIPTION	DATE	APPROVED
		REVISIONS		

TOLERANCES
UNLESS OTHERWISE SPECIFIED:
FRACTIONAL ±1/16" THIRD ANGLE PROJECTION
.X ±0.030"
.XX ±0.010"
.XXX ±0.005"
.XXXX ±0.0005"
ANGLE: MACH ±0.5°
BEND ±1°

UNLESS OTHERWISE SPECIFIED:
-BREAK ALL EDGES 1/32"
-ALL SURFACES SQ WITHIN 0.002"
-ALL DIAMETERS CONCENTRIC WITHIN 0.002"
-STAMP PART NO. ON NON-WORKING SURFACE

CAD IS MASTER

DESIGNED BY: Bill Buck
DATE: 12/17/2019
SHEET 5 OF 5
DO NOT SCALE DRAWING
WEIGHT: NA

APT MANUFACTURING solutions

THIS PRINT IS PROPERTY OF APT MANUFACTURING SOLUTIONS, HICKSVILLE, OH AND IS LOANED TO THE RECIPIENT SUBJECT TO RETURN UPON DEMAND. CONTENTS ARE COPYRIGHTED AND MUST NOT BE REPRODUCED IN ANY WAY WITHOUT PERMISSION.

PART/ASSY DESCRIPTION: 2 IN 2 Out Palletizer

PART/DRW NO:	CODE:	REVISION:
218389FLR	A	-

MATERIAL: See Drawing BOM
PART SIZE: N/A
MATERIAL FINISH: N/A

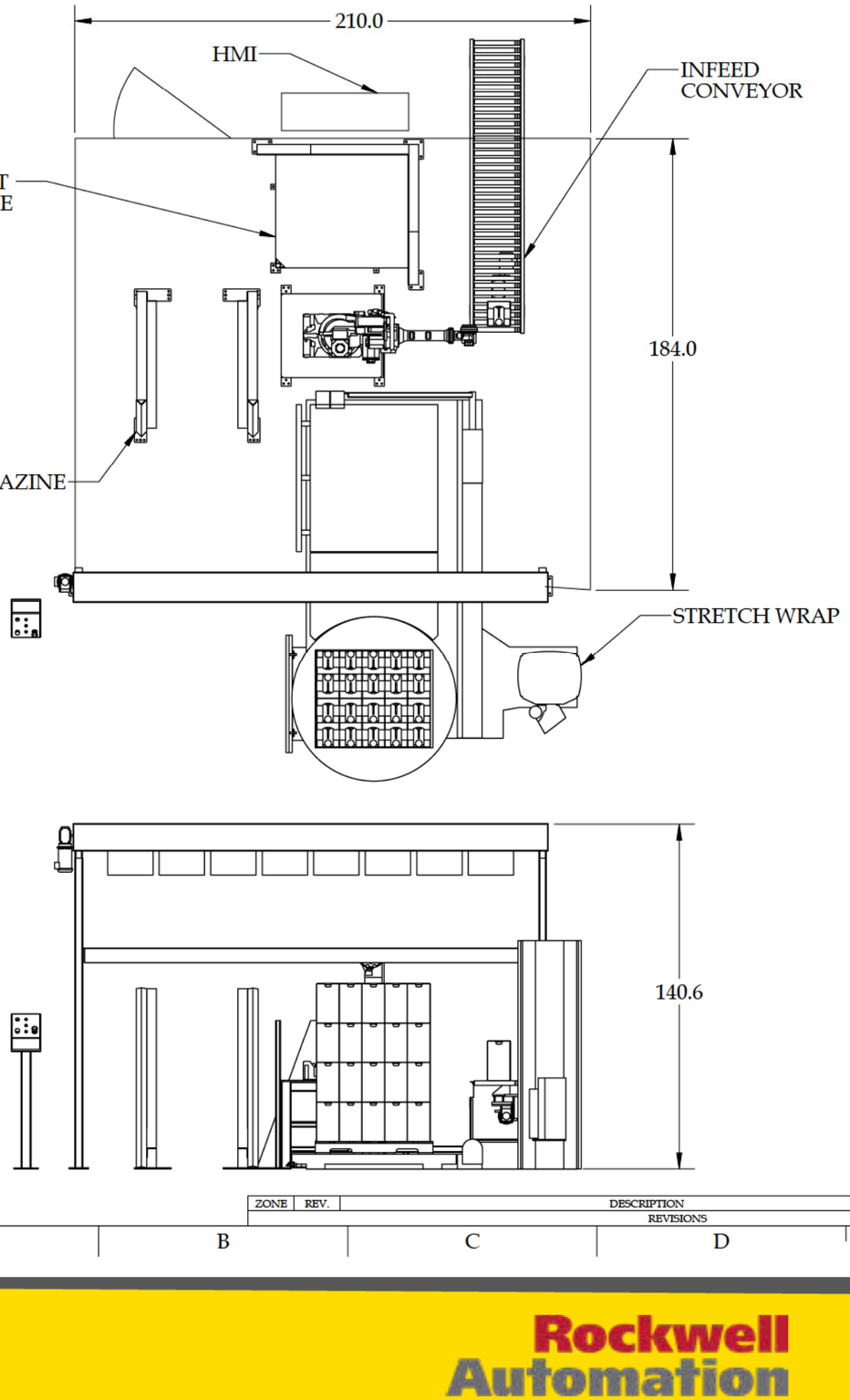

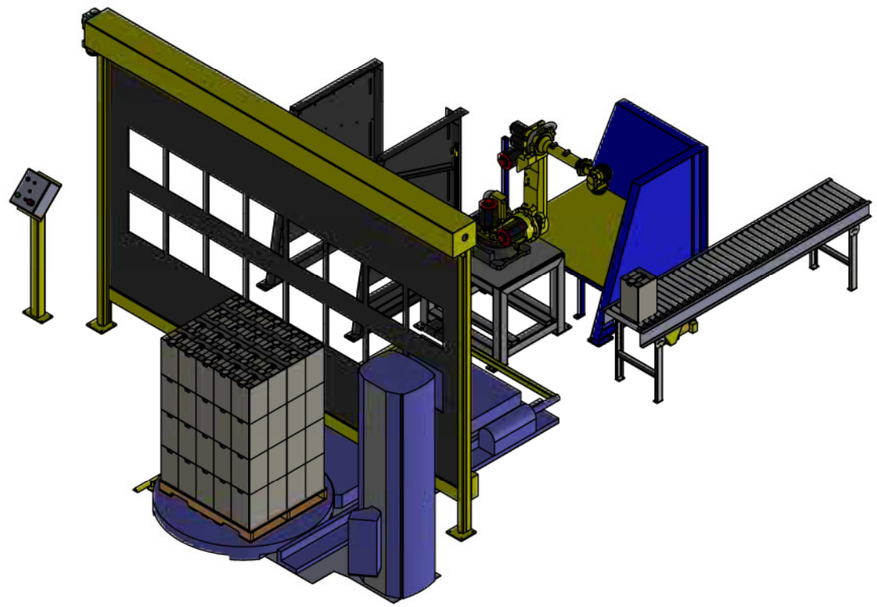

TOLERANCES	DESIGNED BY:		
UNLESS OTHERWISE SPECIFIED: FRACTIONAL ±1/16" THIRD ANGLE PROJECTION .X ±0.030" .XX ±0.010" .XXX ±0.005" .XXXX ±0.0005" ANGLE: MACH ±0.5° BEND ±1°	Bill Buck	APT MANUFACTURING solutions	THIS PRINT IS PROPERTY OF APT MANUFACTURING SOLUTIONS, HICKSVILLE, OH AND IS LOANED TO THE RECIPIENT SUBJECT TO RETURN UPON DEMAND. CONTENTS ARE COPYRIGHTED AND MUST NOT BE REPRODUCED IN ANY WAY WITHOUT PERMISSION.
UNLESS OTHERWISE SPECIFIED: -BREAK ALL EDGES 1/32" -ALL SURFACES SQ WITHIN 0.002" -ALL DIAMETERS CONCENTRIC WITHIN 0.002" -STAMP PART NO. ON NON-WORKING SURFACE	DATE: 06/07/2019	SHEET 1 OF 1	PART/ASSY DESCRIPTION: Palletizer / Stretch Wrap Combo
CAD IS MASTER	DO NOT SCALE DRAWING	WEIGHT: N/A	PART/DRW NO: 217671FLR — CODE: A — REVISION: -
	MATERIAL: See Drawing BOM		PART SIZE: N/A
	MATERIAL FINISH: N/A		

ZONE	REV.	DESCRIPTION	DATE	APPROVED
REVISIONS				

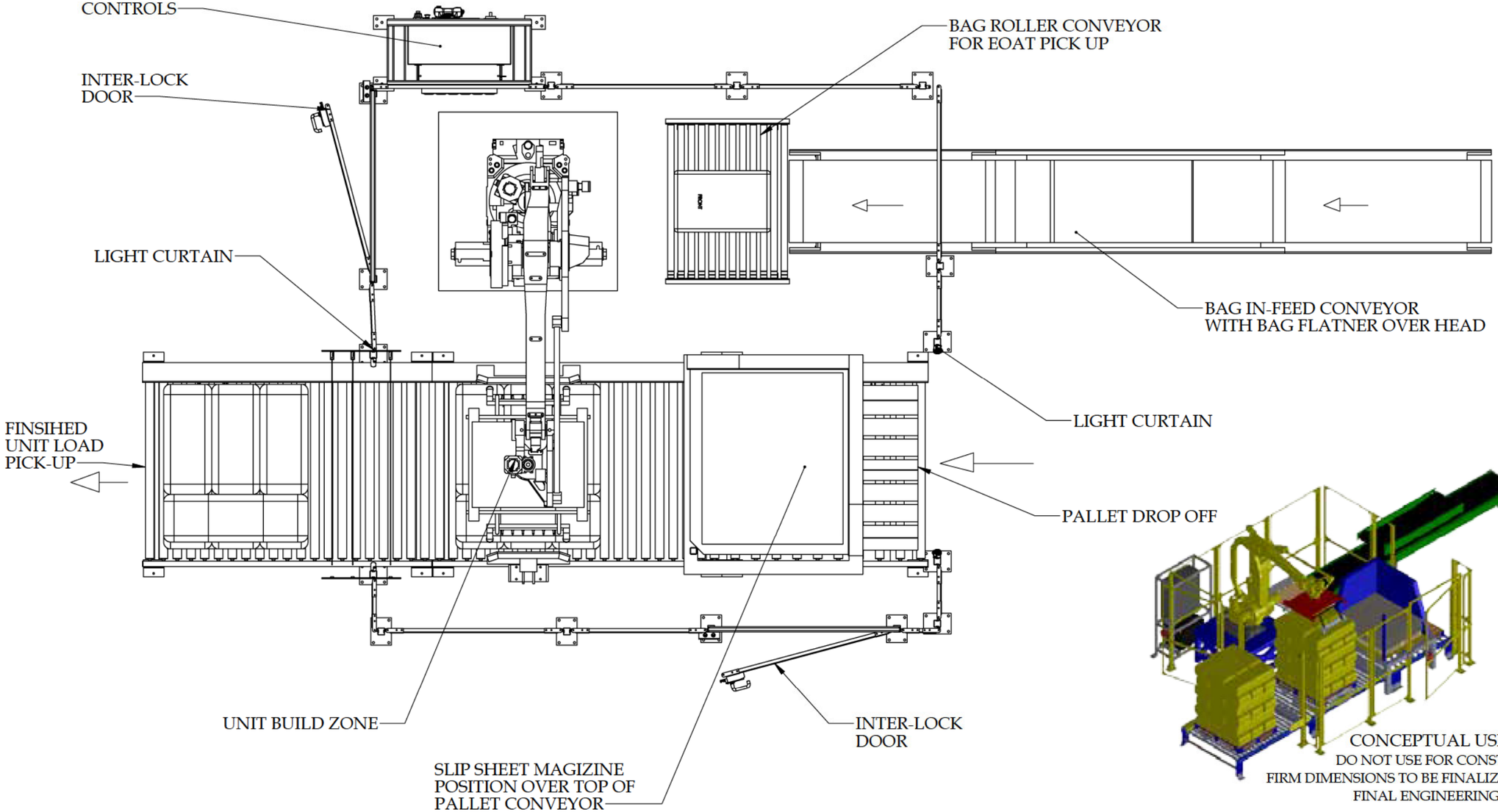

CONCEPTUAL USE ONLY
DO NOT USE FOR CONSTRUCTION
FIRM DIMENSIONS TO BE FINALIZED DURING FINAL ENGINEERING REVIEW.

ZONE	REV.	DESCRIPTION	DATE	APPROVED
REVISIONS				

TOLERANCES UNLESS OTHERWISE SPECIFIED:
FRACTIONAL ±1/16" THIRD ANGLE PROJECTION
.X ±0.030"
.XX ±0.010"
.XXX ±0.005"
.XXXX ±0.0005"
ANGLE: MACH ±0.5° BEND ±1°

UNLESS OTHERWISE SPECIFIED:
-BREAK ALL EDGES 1/32"
-ALL SURFACES SQ WITHIN 0.002"
-ALL DIAMETERS CONCENTRIC WITHIN 0.002"
-STAMP PART NO. ON NON-WORKING SURFACE

CAD IS MASTER

DESIGNED BY: BB
DATE: 02/11/2020
SHEET 1 OF 1
DO NOT SCALE DRAWING
WEIGHT: N/A
MATERIAL: See Drawing BOM
MATERIAL FINISH: N/A

APT MANUFACTURING solutions

THIS PRINT IS PROPERTY OF APT MANUFACTURING SOLUTIONS, HICKSVILLE, OH AND IS LOANED TO THE RECIPIENT SUBJECT TO RETURN UPON DEMAND. CONTENTS ARE COPYRIGHTED AND MUST NOT BE REPRODUCED IN ANY WAY WITHOUT PERMISSION.

PART/ASSY DESCRIPTION: Palletier Robot Cell
PART/DRW NO: 218508 - FLR
CODE: A
REVISION: -
PART SIZE: N/A

Floor Level - Door Entry Options

DUAL STATION
WITH SLIP SHEET MAGAZINE

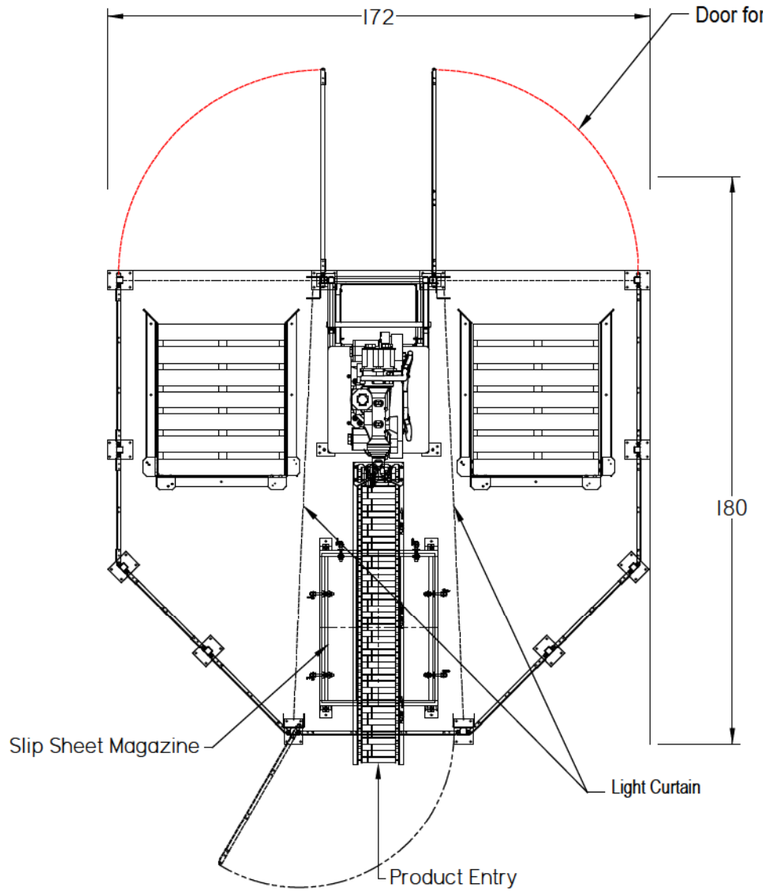

DUAL STATION

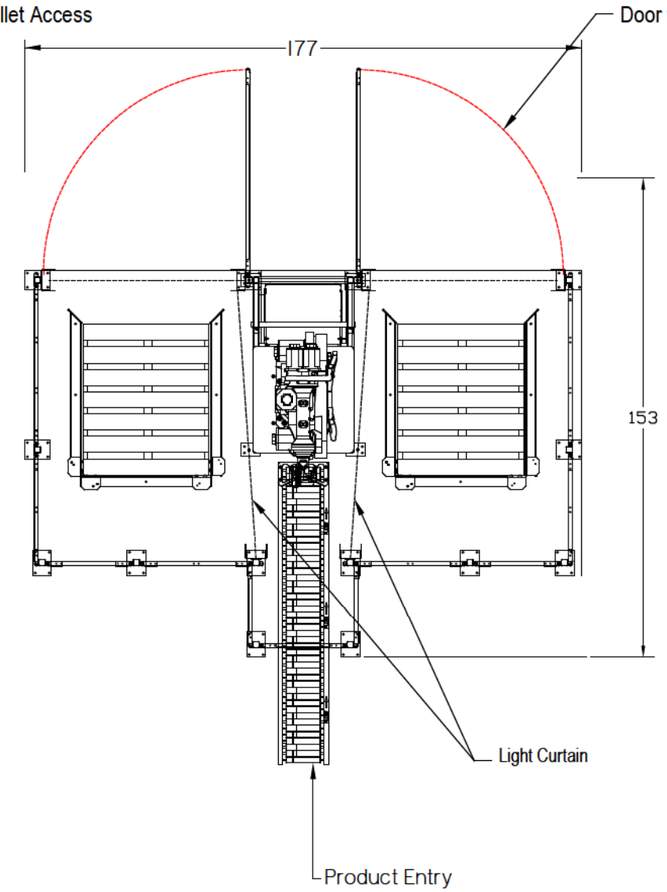

SINGLE STATION

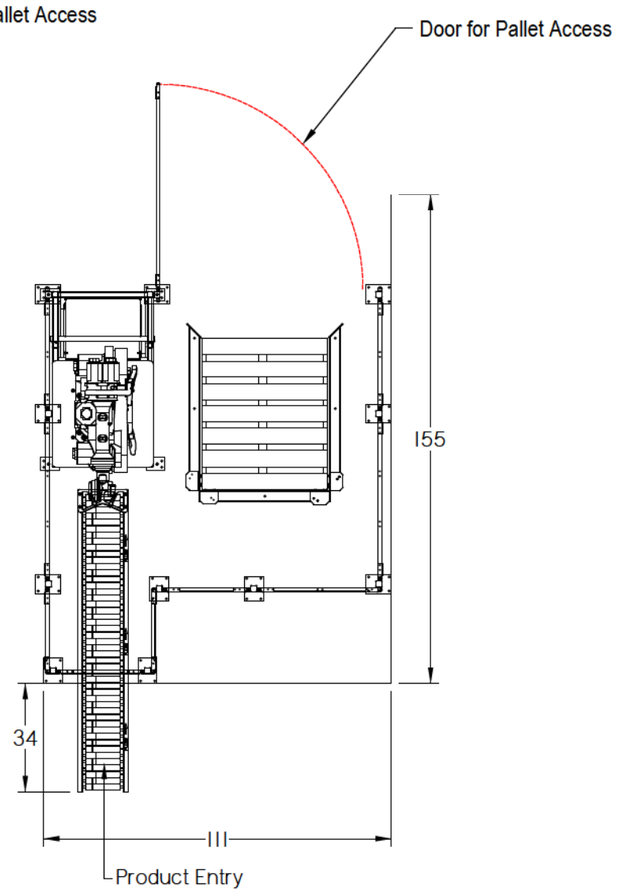

JOB NO.

APT80 Standard Palletizer Cell

TOLERANCE (UNLESS OTHERWISE SPECIFIED)		DRAWN BY	Bill Buck
FRACTION ± 1/64		CREATED BY	roger.sanders
.XX ± .01		SCALE	NONE
.XXX ± .005		DATE	10/03/2019
.XXXX ± .0005		SHEET	1 of 1
ANGLE ± .5°			

NOTE:
- BREAK ALL EDGES .03 UNLESS OTHERWISE SPECIFIED
- ALL SURFACES TO BE SQUARE WITH IN .002
- ALL DIAMETERS TO BE CONCENTRIC WITH IN .002
- ALL PARTS TO BE STAMPED WITH PART NUMBER ON NON-WORKING SURFACE

MATERIAL: N/A

MATERIAL FINISH: N/A

APT MANUFACTURING solutions

This print is property of APT Manufacturing Solutions, Hicksville, OH and is loaned to the recipient subject to return upon demand. Contents are copyrighted and must not be reproduced in any way without permission.

TITLE: Advanced Palletizing Technology

PART NO.: APT80 | QTY:

CUSTOMER: APT Manufacturing Solutions

MACHINE DESCRIPTION: Standard Palletizer Cell Layout Options

NOTE:	REV	DESCRIPTION	BY	DATE

Robot Palletizers

The APT line of modular palletizing solution was engineered to meet the needs of growing industries that have limited space but ergonomic needs for an automatic robot palletizing system. Growing companies face challenges: lack of workers, limited floor space, speed to reach desired throughput, plant capacity, and limited controls staff are at the top of everyone's list. There are competitive products on the market that try to address those issues, but one of the large differentiators for the APT palletizing systems is that it addresses shipping costs, installation, and integration.

Imagine a palletizing solution that can be brought into a factory with minimal intrusion. A system that doesn't require expensive rigging equipment to set it in place, and a solution that works around obstacles and existing equipment without needing the existing plant to be reorganized and shut down just to hook it up.

The APT MOD-PAL robotic palletizer solution is designed to be built and delivered quickly, shipped efficiently, integrated quickly, and get you ROI instantly.

HMI - HUMAN MACHINE INTERFACE

The HMI is broken into 5 color coded tabs with enhanced diagnostics on the system. 3D graphics are put on the different screens.

SYSTEM - These screens are used for general machine setup. A majority of the functions available on the systems require security requirements to access them. Several functions on the System HMI screens include: VFD frequency setup; Recipe Management System, Inspection Limits, I/O Link Setup, Login, and System Security Settings.

OPERATIONS - These screens are used for general machine operation and functionality. 3D model images are used to aid with the intuitiveness and ease of use. Status Indicators, Mode Control, and Manual Operations, along with Operational and Fault Messages are displayed on these screens.

ROBOT - This screen displays all communication and I/O interface between the system PLC and robot. Users may also manually control the functions of the robot and call a specific robot program to run from this screen.

I/O - On this screen users can see all I/O within the system, its present status on/off to run diagnostics and aid in troubleshooting.

PRODUCTION - From these screens the user can view and capture production data to be used for business analytics. Recipe management and the production scheduler allow the users to edit the parameters and schedule all products the system can run.

APT MANUFACTURINGsolutions
Rockwell Automation
FANUC

Contact APT Manufacturing Sales group for more information on our Standard Palletizing Solutions

Or visit our website:
aptmfg.com/products/robot-palletizers

APT
MANUFACTURINGsolutions